The name heard most when good tools are talked about...

Available Through Authorized Distributors

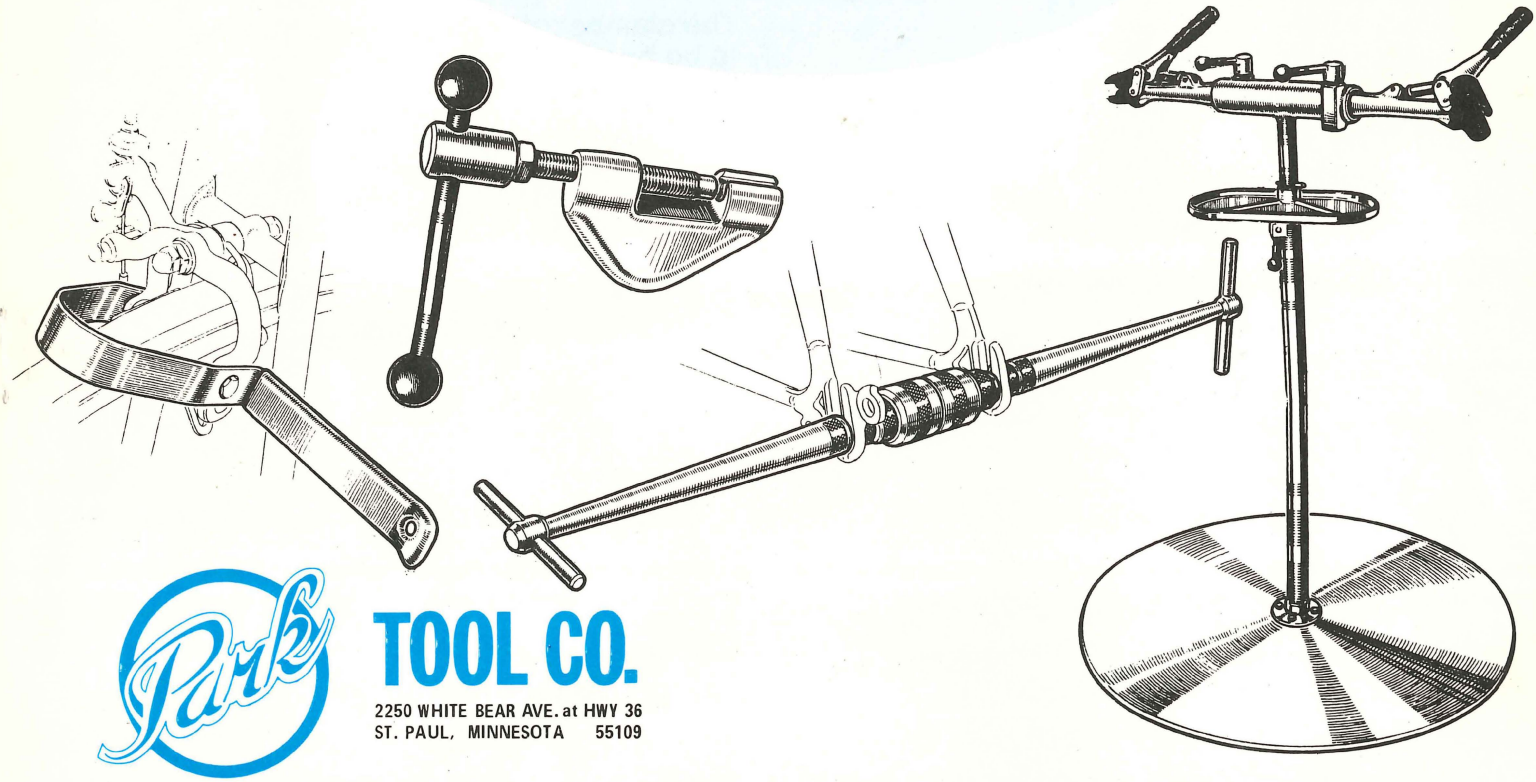

TOOL CO.

2250 WHITE BEAR AVE. at HWY 36
ST. PAUL, MINNESOTA 55109

TOOL CO.

2250 WHITE BEAR AVE. at HWY 36
ST. PAUL, MINNESOTA 55109

From a small beginning in 1967, Park Tool Co. has grown to be a leader in the design and manufacture of specialty bicycle tools and equipment. Each tool has been thoroughly tested by bicycle mechanics and proven by years of use. The making of a Park Tool begins with the finest materials available, followed by precision machining and heat treating, and heavy plating to give many years of service. We are constantly striving to improve our products and are continually working on new ideas for new tools to further improve the bicycle mechanic's efficiency.

PARK TOOLS — QUALITY TOOLS — Recognized and used Worldwide

BICYCLE REPAIR STANDS

THE DELUXE DOUBLE ARM REPAIR STAND PRS-2

PRS-2

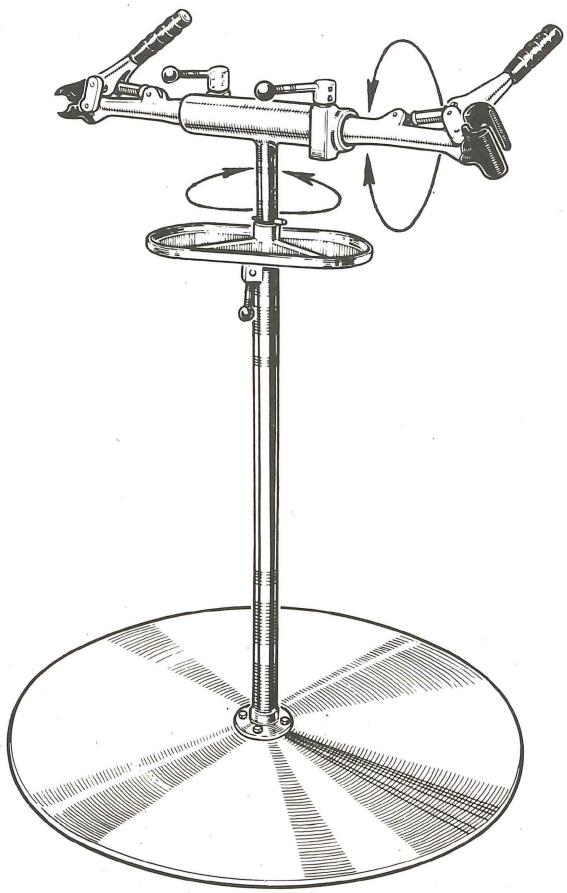

THE ULTIMATE BICYCLE REPAIR STAND, combining the ultimate in quality with the ultimate in adjustability.

Infinite adjustments let you position the bicycle where "YOU" want it.

The height of the clamps adjust from 38" to 52" from the floor.

The clamps rotate 360° allowing the bicycle to be positioned at any angle.

The stand rotates 360° allowing one bike to be swung out of the way while work is done on another, convenient for those "RUSH" repair jobs.

The clamps hold firmly and adjust quickly to any diameter frame tube.

It saves time and space, can be used by one mechanic or two.

The stand is available with or without the base. For mounting directly to the floor, use the Floor Mounting Plate, part #FP-1.

Shipping weight: 170# with base
44# without base

THE DELUXE SINGLE ARM REPAIR STAND PRS-3

PRS-3

This stand is one-half of the Deluxe Double Arm Repair Stand, incorporating most of the same features in a stand suitable for smaller areas.

The height of the clamp adjusts from 37 to 47 inches from the floor.

The clamp rotates 360° allowing the bike to be positioned at any angle.

The clamp is the same as the PRS-2, it holds firmly and adjusts quickly to any diameter frame tube.

The stand is available with or without the base. For mounting directly to the floor, use the Floor Mounting Plate, part #FP-2.

Shipping weight: 102# with base
26# without base

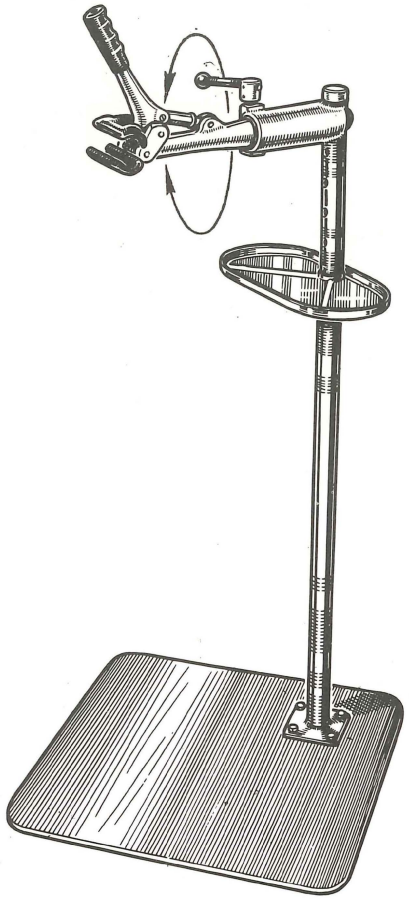

PRS-1

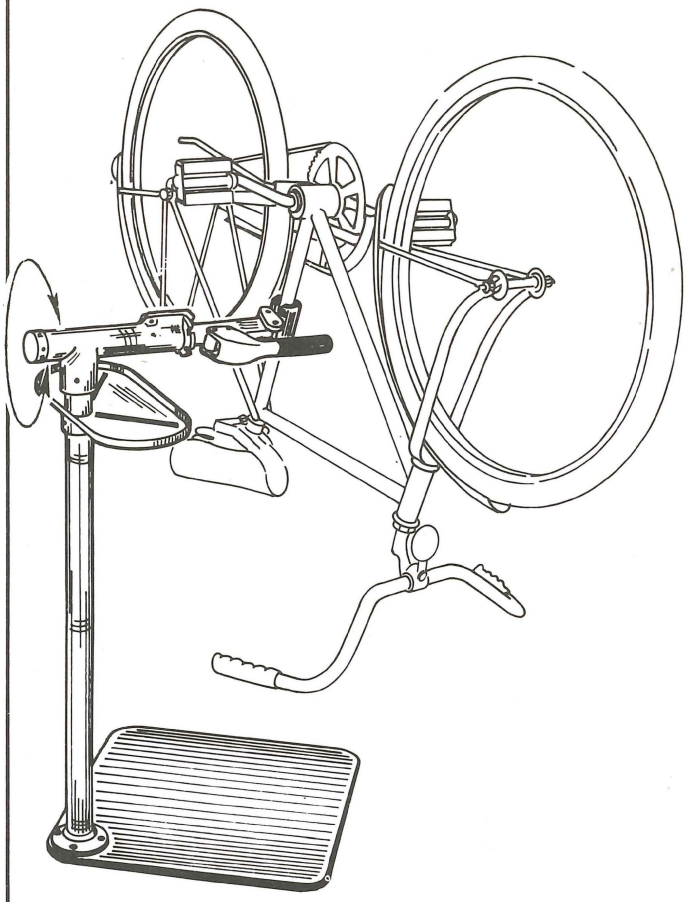

THE SINGLE ARM REPAIR STAND PRS-1

This is our original repair stand.

This stand has a spring loaded clamp that automatically adjusts to any frame tube diameter.

The clamp rotates 360° allowing the bike to be positioned at six different angles.

The stand is available with or without the base. For mounting directly to the floor, use the Floor Mounting Plate, part #FP-1.

The clamp height on this stand is 36 inches. To raise the clamp use Extension, part #EX-1.

Shipping weight: 68# with base
18# without base

WHEEL BUILDING AND TRUING AIDS

TS-2

WHEEL TRUING STAND MODEL TS-2

The New, Improved Park Truing Stand is now, more than ever, the stand to choose for fast, easy wheel truing. Accepts wheels from 16" to 28" with or without tire removed. Axle-holding uprights move simultaneously, always centering wheel hub with calipers, regardless of hub width. Calipers and caliper arm are spring loaded to prevent jamming with a badly out-of-true wheel. Made of heavy, chrome plated steel, with nylon bushings at pivot points. Can be bench mounted or vise held. Truly a professional quality wheel truing stand.

Shipping weight: 18#

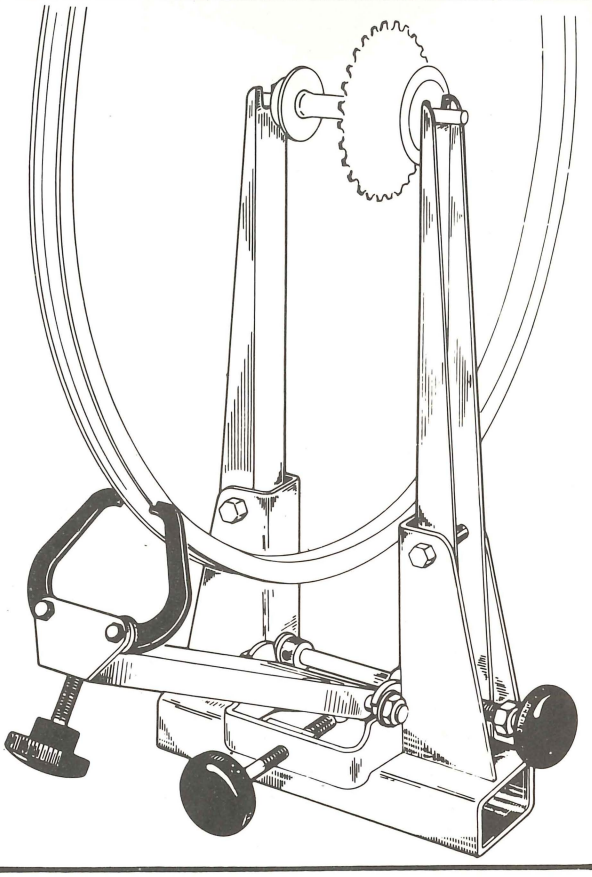

TS-5

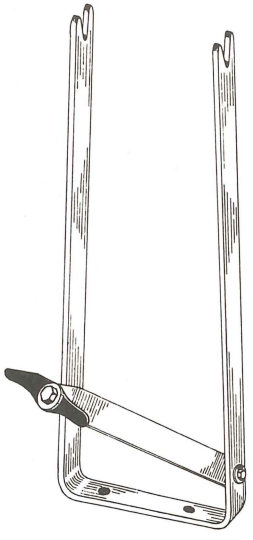

WHEEL TRUING STAND MODEL TS-5

This new, lost cost, truing stand is designed for occasional shop use or for use by bike riders, or others not needing the accuracy possible with the TS-2 Truing Stand. Both the roundness and side-to-side truness of a wheel can be checked with this stand, but not simultaneously. Because the stand does not automatically center offset hubs, it is necessary to use a wheel aligning gauge, such as our WAG-1, to properly center a rim in relation to the hub. Can be bench mounted or vise held. Plated steel.

Shipping weight: 3#

SW

SPOKE WRENCHES

Professional quality, precision sized spoke wrenches are hardened and chrome plated for long service. Park Spoke Wrenches are vinyl coated in one of 4 colors telling the size at a glance. Color coded size card is included with complete set (SW-5).

Available individually or in sets

Shipping weight: 2½ oz. per set

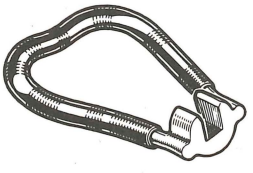

SW-1 (Green) Spoke Wrench for 80 gauge Union and Torrington Spokes

SW-2 (Red) Spoke Wrench for 80 gauge Japanese Spokes

SW-3 (Blue) Spoke and Wrench for 105 gauge Union and Torrington Spokes

SW-4 (Yellow) Spoke Wrench for 120 Gauge Union and Torrington Spokes

SW-5 Set of Four Spoke Wrenches

SPOKE WRENCH SIZES

GREEN	80 Gauge Union & Torrington
RED	80 Gauge Japanese
BLUE	105 Gauge
YELLOW	120 Gauge

CBW

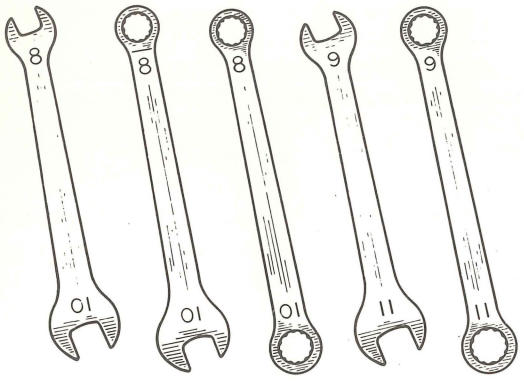

CALIPER BRAKE WRENCHES:

CBW 1	8mm open — 10mm open
CBW 2	8mm box — 10mm box
CBW 3	8mm box — 10mm open
CBW 4	9mm open — 11mm open
CBW 5	9mm box — 11mm box
CBW SET	Set of 5 Above

Available individually or in sets

Shipping weight: 1 oz. each
5 oz. per set

DW-1

DERAILLEUR WRENCH DW-1

8mm open — 9mm open

Shipping weight: 1 oz.

SPT-1

CAMPI-STYLE SEAT POST WRENCH SPT-1

10mm 12 point box — 13mm open—1⅛" offset

Shipping weight: #

CT-1

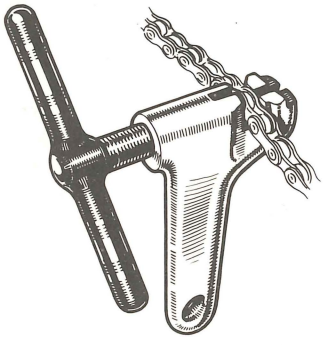

SCREW TYPE CHAIN TOOL CT-1

This chain tool is the perfect size. It fits nicely in your hand and is large enough to use in a vise. The built-in gauge shows how far the rivet is pushed out. It has a replaceable hardened pin and a vinyl coated handle for comfort.

Shipping weight: 8 oz.

CT-2

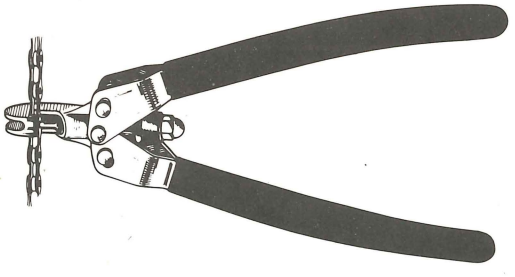

PLIER TYPE CHAIN TOOL CT-2

Designed for fast, easy removal or repair of chain, the tremendous leverage removes even the toughest rivets. To use simply put the chain roller in the built-in recess and squeeze the handles. The travel adjusts to push the rivet back in the right distance.

Shipping weight: 1½#

CTP

REPLACEMENT CHAIN TOOL PINS CTP

These pins fit both Park chain tools.

Shipping weight: 9 oz. per 100

808

REPAIR KIT FOR THE CT-2 CHAIN PLIERS 808

This kit consists of 5 #CTP Chain Tool Pins, 2 center clevis pins and 2 cir-clips

Shipping weight: 2 oz.

464

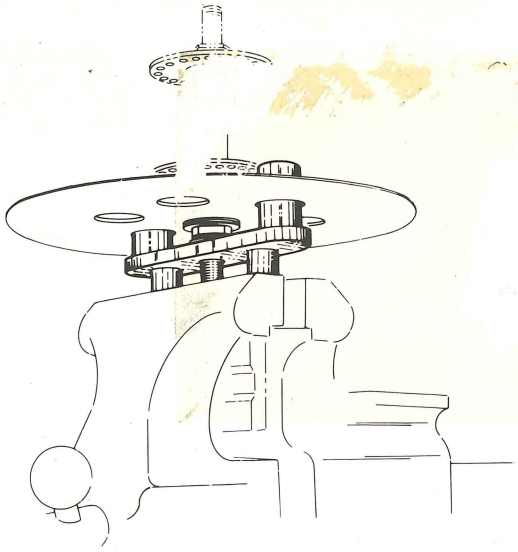

RA[illegible]C REMOVAL
[illegible]OL[illegible]

[illegible]s is t[illegible]nly tool available for removi[illegible]e Shimano disc brake rotors fr[illegible]he hub. This is necessa[illegible] replace spokes in the [illegible]ee[illegible]s the two most [illegible]e patterns just by [illegible] tool over.

Shipping weight: 12 oz.

KS-1

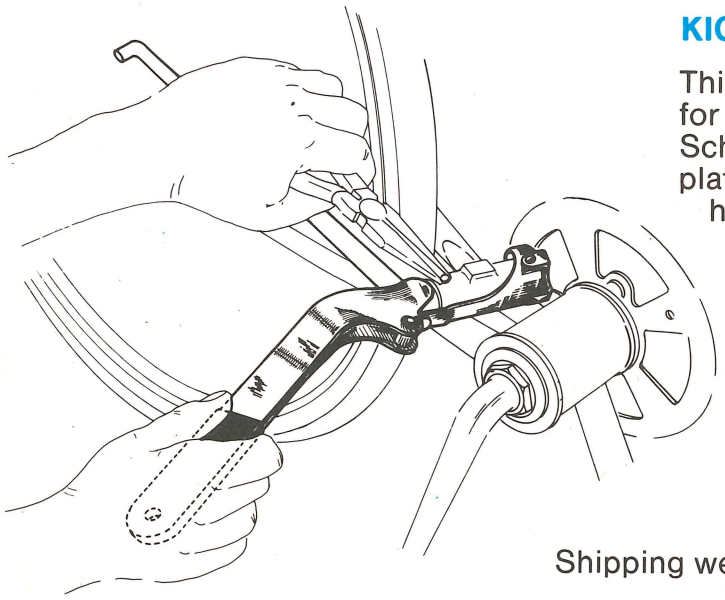

KICKSTAND TOOL KS-1

This tool is specifically designed for installing and removing the Schwinn kickstand. It is chrome plated and has a long vinyl dipped handle that produces all the leverage needed to compress the spring. It works on all the Schwinn models.

Shipping weight: 8 oz.

PTS-1

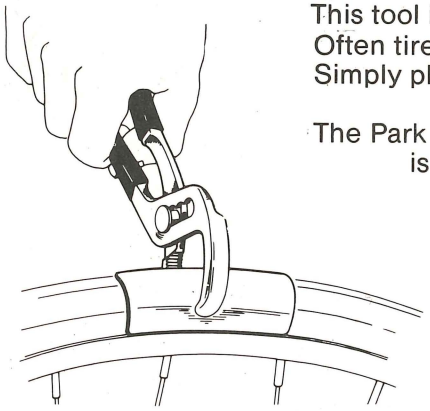

PARK TIRE SEATER PTS-1

This tool is designed to quickly and easily "seat" stubborn tires. Often tire beads slip below the rim edge and are difficult to pull out. Simply place the non-slip jaws on the tire and "lift out".

The Park Tire Seater adjusts for various tire sizes and is chrome is chrome plated and the handles are vinyl coated for comfort.

Shipping weight: 1#

DISTRIBUTED BY:

DISPLAY & STORAGE AIDS

PDS-1

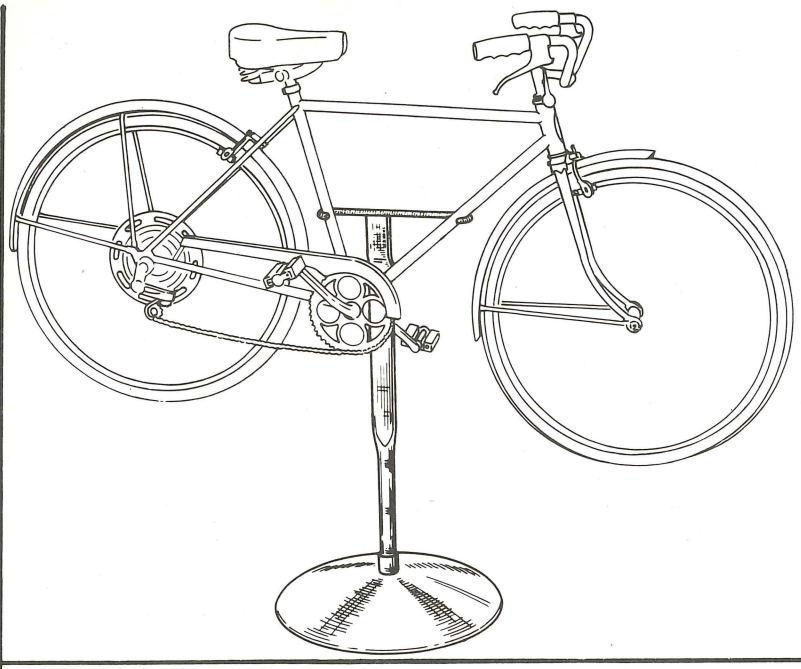

PARK DISPLAY STAND PDS-1

This stand holds the bike off the floor to demonstrate and show its features.

It is coated with black vinyl so it won't marr or distract from the bike.

It is excellent for displaying frames.

It can also be used for minor repairs and adjustments.

Shipping weight: 23#

902B

WOOD THREAD BICYCLE STORAGE HOOKS

ORIGINATED BY PARK TOOL COMPANY

Ideal for hanging bikes, wheels, toys, ladders, etc.

Clean, sharp threads

Heavy vinyl coating

Zinc Plated

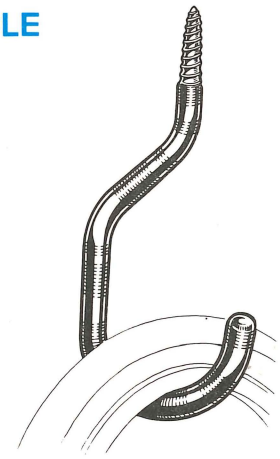

Blister packed
Two on a card

20 cards
per carton

100 cards
per case

Shipping weight: 8# per carton
39# per case

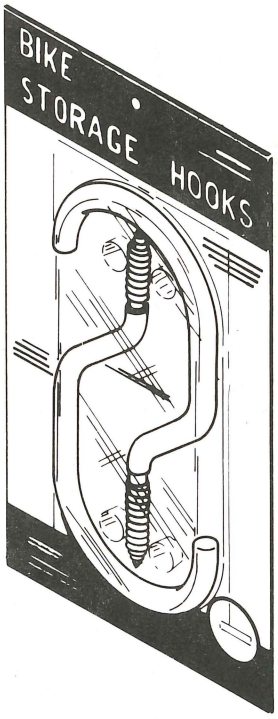

451

WOOD THREAD BICYCLE STORAGE HOOKS — Bulk packed

This is the same hook as the #902B only not blister packed.
Shipping weight: 17# per 100 hooks

450

MACHINE THREAD BICYCLE STORAGE HOOKS #450

This is the same type and size of hook as the above except with 1½ inches of 5/16 — 18 machine thread. An ideal way to store bicycles or wheels using steel tubing or angles as the support for the hooks. They are vinyl coated and bulk packed complete with two hex nuts per hook.

Shipping weight: 19½# per 100 hooks

CALIPER BRAKE TOOLS

SD-1

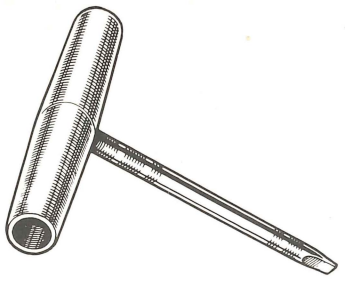

T-HANDLED SCREWDRIVER SD-1

This screwdriver is specially designed to deliver that extra amount of torque necessary to get the brake levers really tight. The blade is made to fit the pull up screws.

Shipping weight: 3 oz.

BCE-2

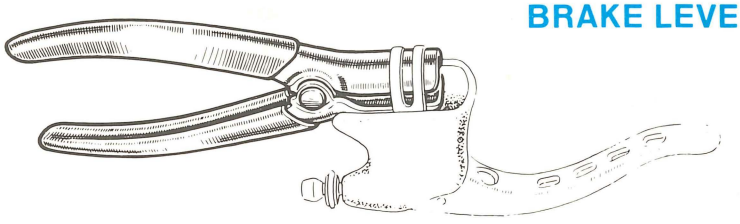

BRAKE LEVER CLAMP EXPANDER BCE-2

This special purpose pliers helps to round out the clamp loop of the brake lever when installing the lever on the handlebar.

Shipping weight: 5 oz.

BT-1

THIRD HAND BRAKE TOOL BT-1

The Third Hand is for holding the brake shoes against the rim while installing the cable. The vinyl coating makes it easy on the hands and the smooth edges allow it to be attached and removed without catching on any of the mechanism.

Shipping weight: 3 oz.

BT-2

FOURTH HAND BRAKE TOOL BT-2

This is used to pull the cables tight without using a pliers. It is especially useful on center pull brakes.

Shipping weight: 4 oz.

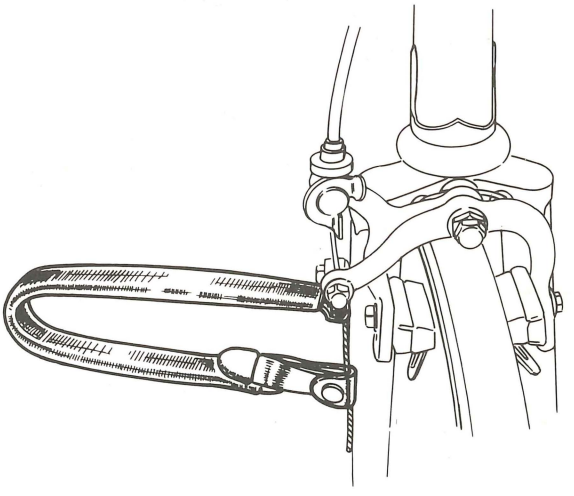

WAG-1

WHEEL ALIGNMENT GAUGE WAG -1

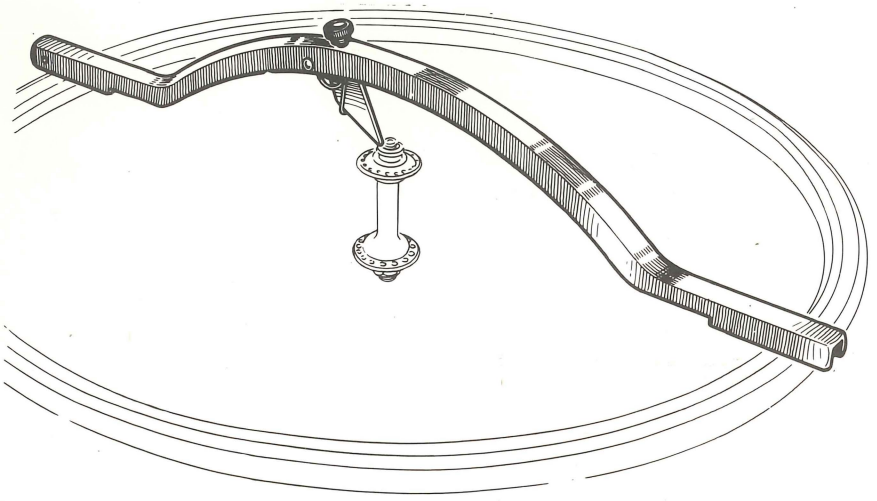

This tool is a quick, easy way to check the offset of rear hubs on 5 and 10 speed bike. It can be used on any size wheel either on or off the bike. The positive, screw operated indicator will not move when set. It is an aid when determining whether the frame is properly aligned.

Shipping weight: 1#

CW

PARK CONE WRENCHES

The finest available, these wrenches are made of thin chrome plated tool steel with vinyl coated handles.

They are made in twelve different sizes for many applications and are available individually or in sets.

Shipping weight:
2½ oz. per wrench
1# per set

CW-1	½" Cone Wrench
CW-2	9/16" Cone Wrench
CW-3	⅝" Cone Wrench
CW-4	11/16" Cone Wrench
CW-5	¾" Cone Wrench
CW-6	⅞" Cone Wrench
CW-7	Fractional Set
CW-13	13mm Cone Wrench
CW-14	14mm Cone Wrench
CW-15	15mm Cone Wrench
CW-16	16mm Cone Wrench
CW-17	17mm Cone Wrench
CW-18	18mm Cone Wrench
CW-19	Metric Set

AV-1

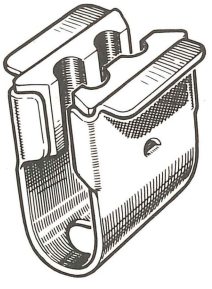

AXLE VISE AV-1

This tool holds the axle so it will not turn while work is done on the hub. It has two different diameter receptacles so it will work on front and rear axles. It is simple to use, just insert the axle into the proper diameter opening and tighten the vise. The jaws open automatically when the vise is opened.

Shipping weight: 3 oz.

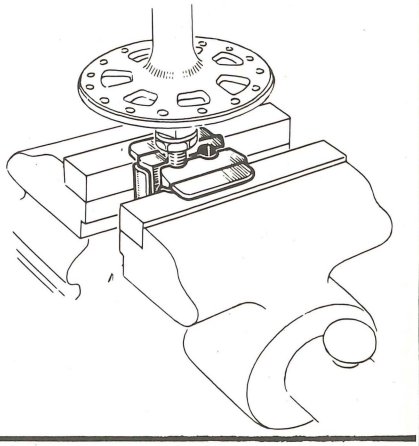

SBC-1

SPOKE, BEARING, AND COTTER GAUGE SBC-1

This handy shop aid is ideal for sizing spokes, ball bearings and crank cotters. To use, just hang the head of the spoke in the oblong hole and read its length on the scale. For crank cotters and ball bearings it works just like a gauge for drill bits. Shipping weight: 2 oz.

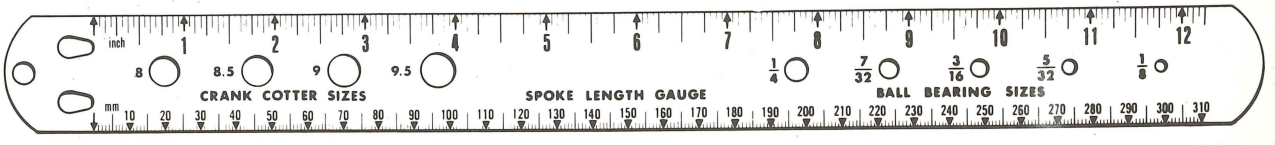

FRAME AND FORK STRAIGHTENING TOOLS

FRAME AND FORK STRAIGHTENER FFS-1

FFS-1

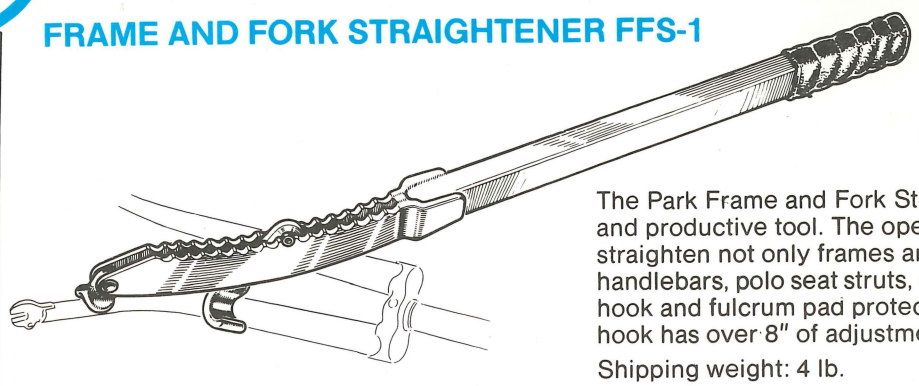

The Park Frame and Fork Straightener is a versatile and productive tool. The open hook design enables it to straighten not only frames and forks but also cranks, handlebars, polo seat struts, etc. The vinyl coating on the hook and fulcrum pad protects painted surfacs. The hook has over 8" of adjustment along the lever.

Shipping weight: 4 lb.

FRAME AND FORK END ALIGNMENT GAUGE SET FFG-1

FFG-1

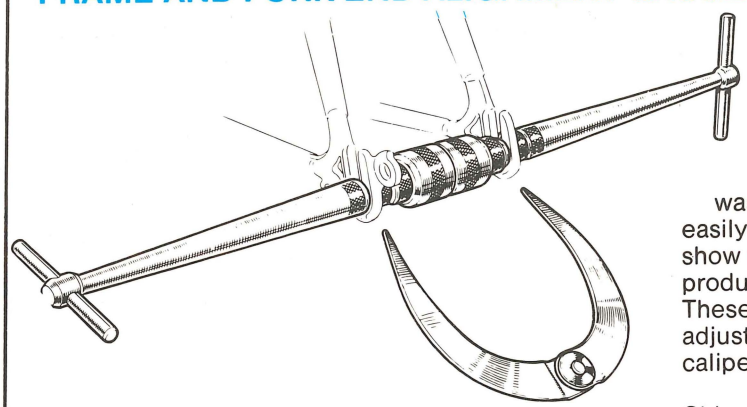

There are occassions, even on new bikes, when the frame and fork drop-outs are not parallel, creating abnormal stresses on the axles and also the skewers on quick release hubs. The Park Frame and Fork Alignment Gauge Set was designed to align the drop-outs quickly and easily with out elaborate fixtures. They quickly show whether the drop-outs are parallel and produce plenty of leverage to straighten them. These are the only gauges available that can be adjusted to compensate for various hub widths. A caliper is provided for checking this dimension.

Shipping weight: 2½#

FORK CLAMP ONLY FT-3
FORK CLAMP AND GAUGE FT-4

FT

Fork Straightening can be easy and profitable with the proper equipment. The Park Fork Clamp and Gauge is designed to quickly and accurately determine the truness of all forks and securely hold the fork stem for easy straightening. The sliding Gauge Bar is used to check the truness along the entire length of the fork blades and is marked on each end to check the width. The Clamp can be inserted in any vise, as shown, or on its side.

FT-3

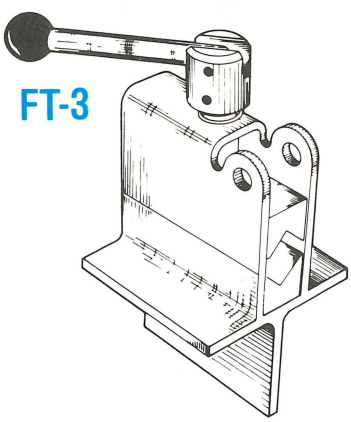

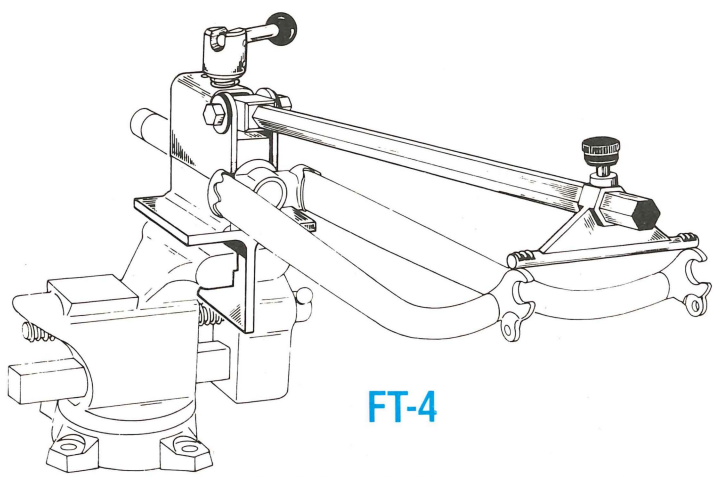

FT-4

To convert an FT-3 Fork Clamp to an FT-4 Fork Clamp and Gauge, use an FT-5 Gauge Add-on Kit.

Shipping weight: FT-3 6#
FT-4 10#
FT-5 2#

TOOLS FOR CRANK SETS

CR-2

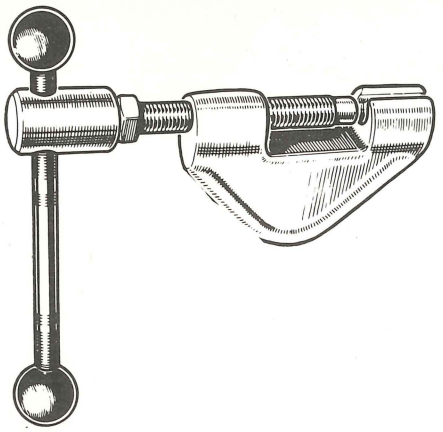

CRANK COTTER REMOVER CR-2

This tool was designed to remove and reset tapered crank cotters by applying tremendous power to the pin without the damaging effects of a hammer.

Shipping weight: 2#

CCW-1

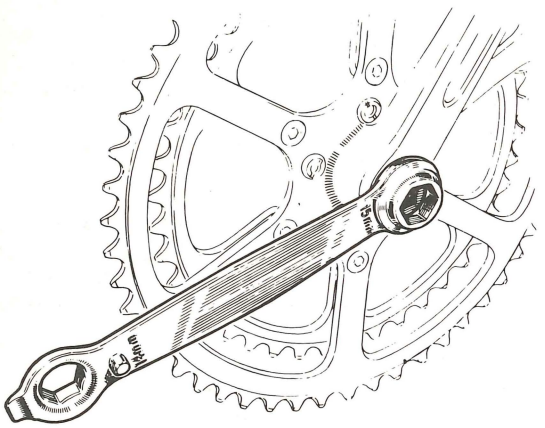

COTTERLESS CRANK WRENCH CCW-1

This one wrench can remove the dust caps and tighten or loosen the mounting bolts on all brands of cotterless cranks. It has a 5mm hex key and a screwdriver for the dust caps and box wrench sizes 14, 15 and 16mm for the mounting bolts.

Shipping weight: 4 oz.

CCP-1

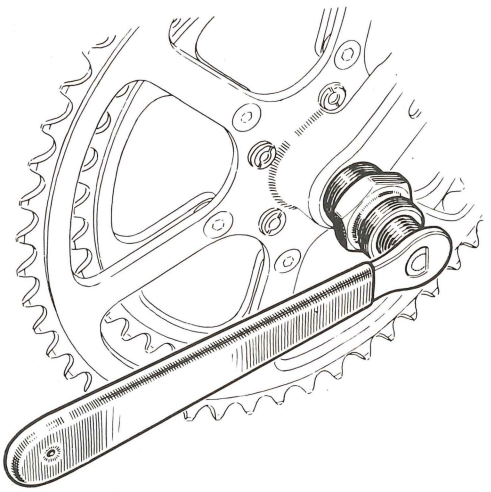

COTTERLESS CRANK PULLER CCP-1

This unique design, originated by Park Tool Company, eliminates the need to have a different puller for each different brand of crank set. The double ended puller nut fits all cranks.

Shipping weight: 5 oz.

CC Set

COTTERLESS CRANK PULLER AND WRENCH SET CC SET

This set includes one CCP-1 Puller and one CCW-1 Wrench packaged together with instructions.

Shipping weight: 9 oz.

DELUXE BENCH MOUNT REPAIR STAND PRS-4

PRS-4

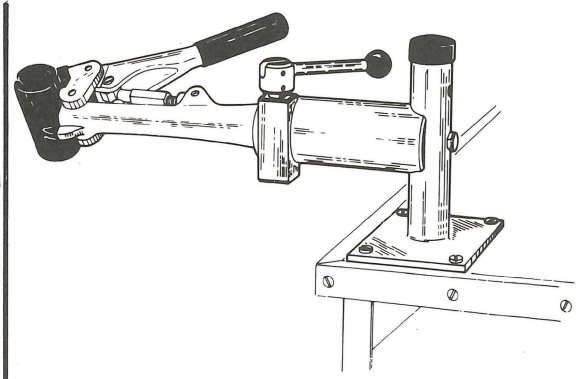

This stand uses the same clamp as the PRS-2 and PRS-3.

The clamp rotates 360° allowing the bike to be positioned at any angle.

The clamp can be adjusted to two different heights.

Ideal for where floor space is limited.

Shipping weight: 12#

BENCH MOUNT REPAIR STAND PRS-5

PRS-5

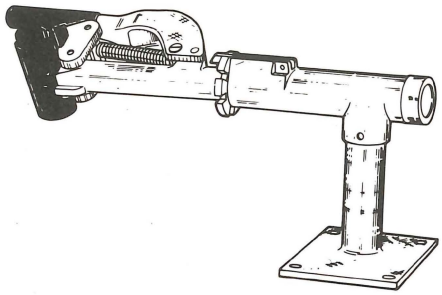

This stand uses the same spring loaded clamp as the PRS-1 Repair Stand.

The clamp rotates 360° allowing the bike to be positioned at six different angles.

Shipping weight: 9#

RUBBER CLAMP COVERS #466

466

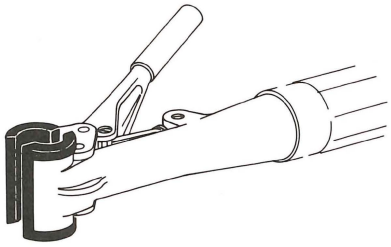

These rubber covers can be used to protect the bike from the clamp after the original plastic covering has become worn. The plastic covering must be removed from the clamp for these to fit properly. They are sold in pairs. Fits all Park stands.

Shipping weight: 2 oz. pr.

FLOOR MOUNTING PLATE

FP-1 & FP-2

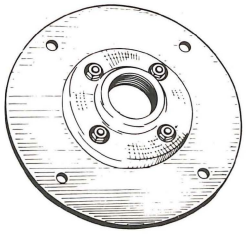

FP-1 (pictured) is used for mounting the PRS-1 and PRS-2 directly to the floor. FP-2 is used for mounting the PRS-3 directly to the floor.

Shipping weight: 4½#

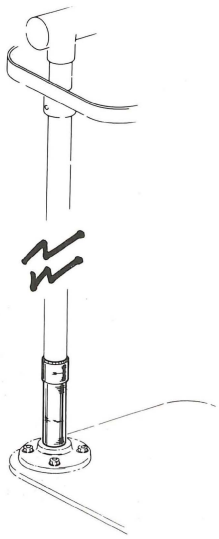

BASE SUPPORT EXTENSION EX-1

EX-1

This can be used to increase the clamp height on the PRS-1 Single Arm Repair Stand approximately 6 inches.

Shipping weight: 1½#